WRT35ST

SEE-THRU WOOD-BURNING FIREPLACES

Framing Dimensions

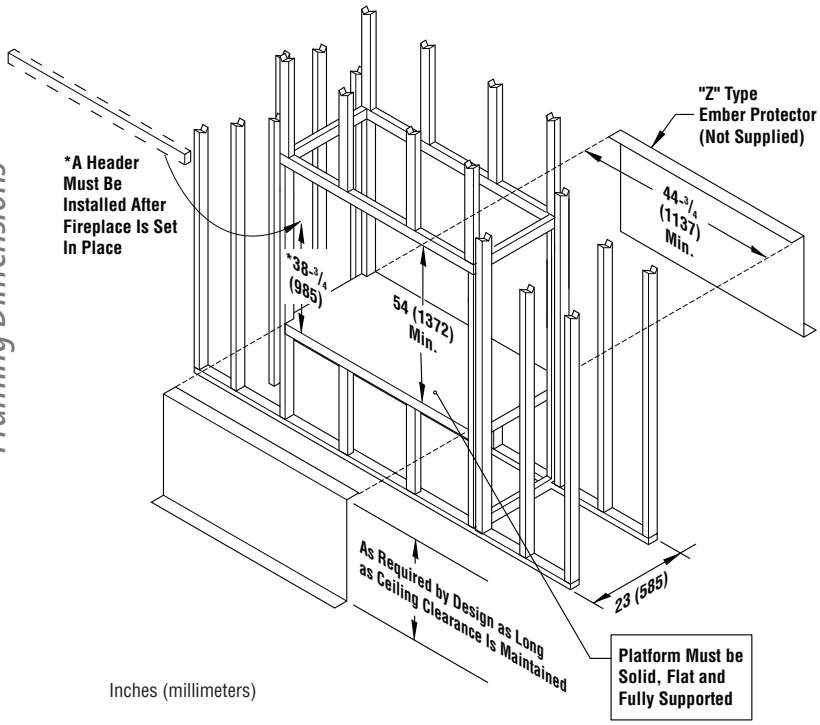

Inches (millimeters)

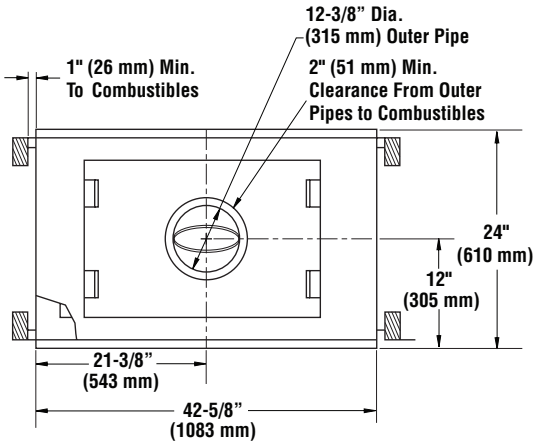

Top View

Fireplace Dimensions

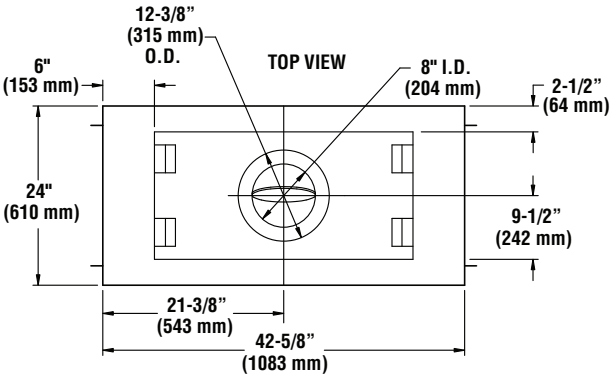

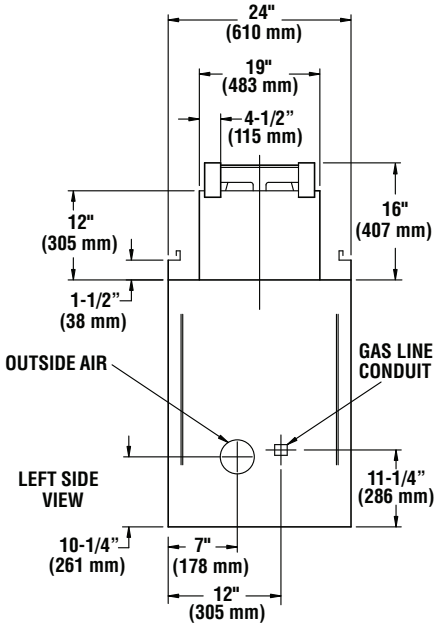

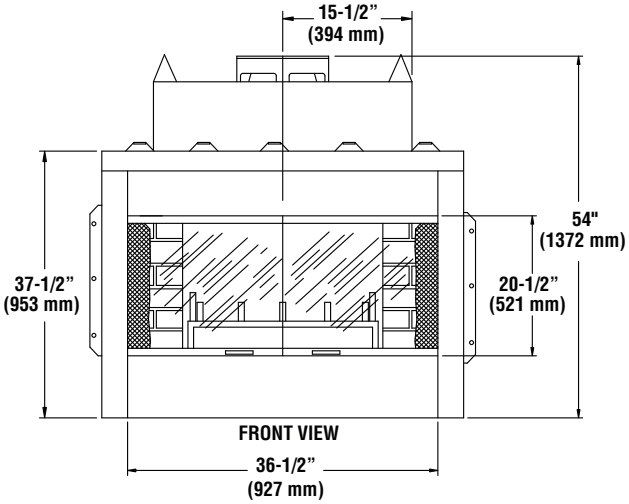

NOTE: DIAGRAMS & ILLUSTRATIONS ARE NOT TO SCALE.

WRT35ST

Product Info

Product Reference Information					
Cat. No.	Model	Desc.	Interior	Shipping Weight	Shipping Volume
F0644	WRT35STWSI	Radiant	WS	225 lb.	39.6 cu. ft.

Listing

C PFS US

Report No. 09-146

This fireplace has been tested and approved by PFS Corporation under UL127/ULC-S610 standard as a Factory Built Appliance and may be used with gas logs approved to ANSI Z21.60, Z21.84 or Z21.11.2 standards.

Clearances

Clearances to Combustibles	
Description	Min. Clearance
Back and sides of fireplace	1 (26)*
Adjacent wall	12 (305)
Chimney outer pipe surfaces	2 (51)
Bottom of fireplace to floor	0 (0)

* Not required at nailing flanges
Inches (millimeters)

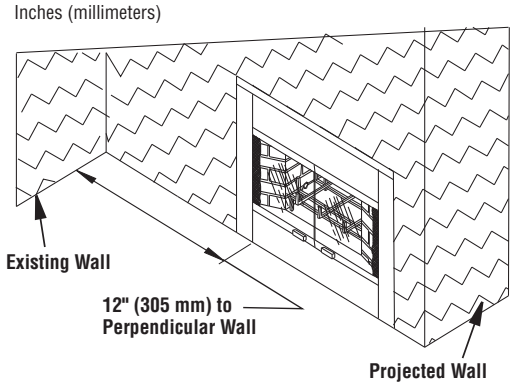

Mantel Clearances to Metal Face

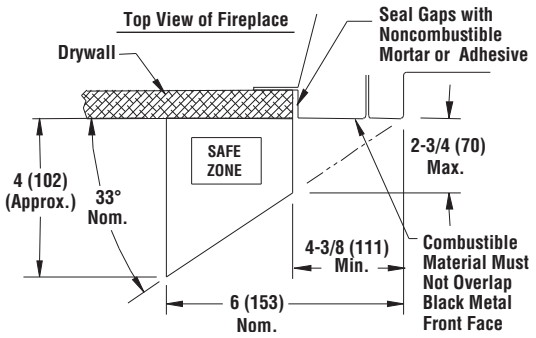

Mantel Clearances

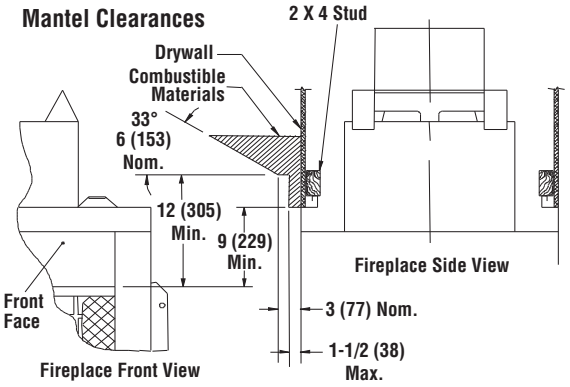

Venting

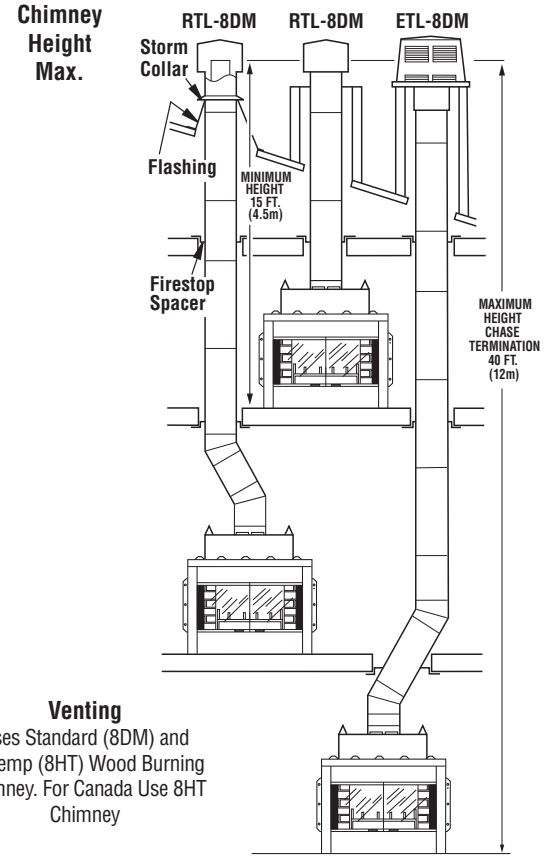

Venting
Uses Standard (8DM) and Hi-Temp (8HT) Wood Burning Chimney. For Canada Use 8HT Chimney

Typical Offset Installations

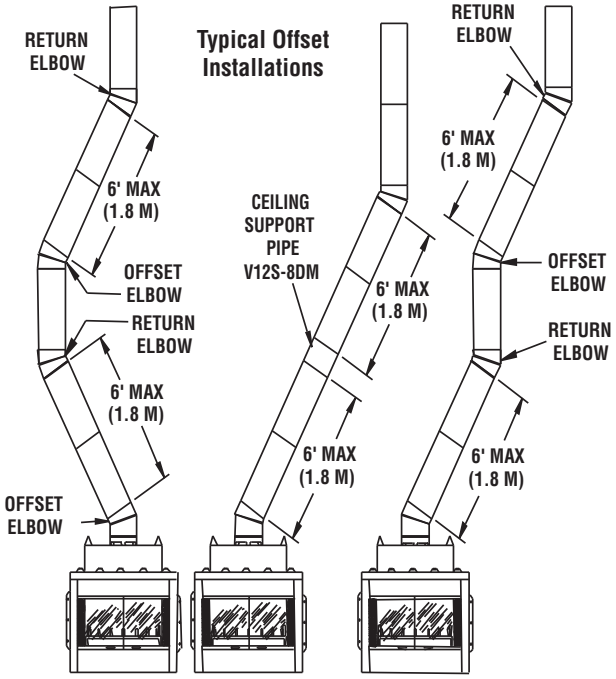

Printed in U.S.A. © 2016 Innovative Hearth Products
P/N 900731-01 REV. A 02/2017

Superior FIREPLACES®